REAL FLAME®
GEL FIREPLACES

# Fireplace Model # 9500

# Instruction Manual

# Instructions and warnings for use

REAL FLAME®
GEL FIREPLACES

Welcome to the Real Flame® family of gel fuel products. If you have any questions please call customer service at **1-800-654-1704** or log on to **www.REALFLAME.com.**

# STOP!

If parts are missing or damaged, call **1-800-654-1704** for assistance

## ⚠ WARNINGS ⚠

1. Fireplace is designed to be used with Real Flame® gel fuel only. Do not use with any other gel fuel or any other flammable liquid or gel.
2. Read entire label and instructions before using Real Flame gel fuel.
3. Make sure fireplace is set on a flat, level and stable surface. Keep fireplace stable at all times.
4. Make sure fireplace and gel fuel are burned on a flat and level surface.
5. Never leave a burning fire unattended, especially around children or pets.
6. Fireplace is not to be operated by children. Keep away from children and pets.
7. Exercise the same precautions as you would with any open fire.
8. When in use some surfaces will be hot, use caution.
9. Never touch logs, gel fuel cans or any other metal surfaces during or immediately after burning gel fuel. They will be extremely HOT. Allow them to cool for 60 minutes before touching.
10. Do not burn more than three cans of fuel at once.
11. Do not place more than 15 lbs. of weight on the top of the fireplace at anytime.
12. Do not alter fireplace, metal firebox or log set in any manner.
13. Keep fireplace and gel fuel cans away from flammable materials at all times.
14. Do not store or use gasoline or any other flammable vapors, liquids, or materials in the vicinity of fireplace and gel fuel.
15. Do not wear flammable or loose clothing when operating the fireplace.
16. Do not move fireplace while in use. Do not attempt to move or store the fireplace until 60 minutes after gel fuel cans have been extinguished.
17. Do not burn trash, paper, or wood in the fireplace. Burn only Real Flame® gel fuel in the fireplace.
18. Do not burn gel fuel outside designated burn areas on the metal grate.
19. Do not put fireplace in an area with lots of traffic, such as a hallway or entryway.
20. In case of an emergency use a $CO_2$ extinguisher to extinguish the fire.
21. Death, serious injury or damage to property may occur if the warnings above are not followed.
22. If for any reason you cannot follow these warnings please call us at 1-800-654-1704.

NOTICE: Buyer assumes all responsibility for safety and use that is not in accordance with instructions and warnings.

## Using your Fireplace

- Follow all instructions included with gel fuel before use.
- Before using Fireplace make sure you have read and understand the step-by-step instructions.
- During the initial burn you may experience a slight odor. This odor is temporary and will be absent on following burns.

# 9500 Winterthur Instructions

## Parts List

| Number | Description | Part Number | Quantity |
|---|---|---|---|
| 1 | Base | 9501 | 1 |
| 2 | Left Side Panel | 9502 | 1 |
| 3 | Right Side Panel | 9503 | 1 |
| 4 | Left Front Panel | 9504 | 1 |
| 5 | Right Front Panel | 9505 | 1 |
| 6 | Center Panel | 9506 | 1 |
| 7 | Mantel Top | 9507 | 1 |
| not shown | | | |
| | Firebox Clips | 1075 | 2 |
| | screws | 9716 | Bag |

Before assembly, locate instructions and hardware. Take out all parts and compare them to the photograph and the assembly illustrations. Be sure you have all parts identified.

Check for screws that are wrapped in the packaging to be sure you don't discard them. You may have extra screws.

A helping hand is always good. Assemble fireplace with an adult assistant if possible.

The cement log is heavy. Put the fireplace in the desired location before inserting cement log.

Use caution not to over tighten screws.

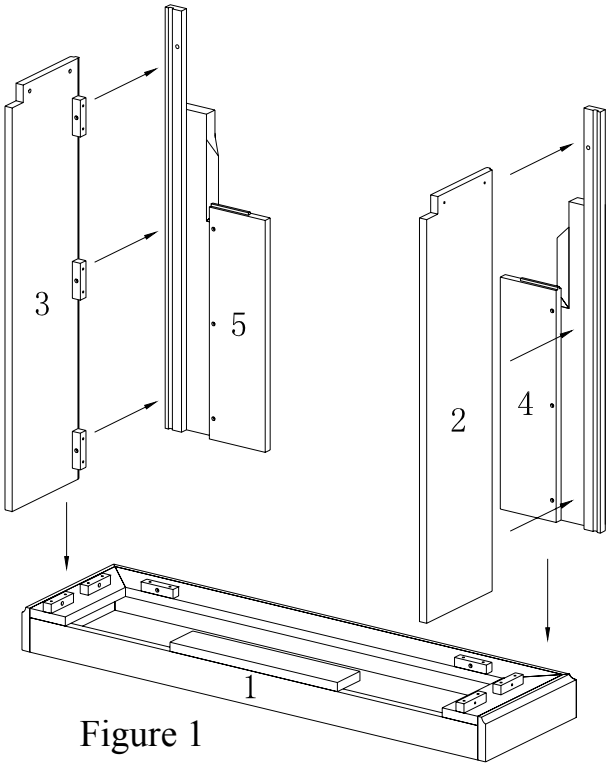

Figure 1

## StepOne

**Figure 1**

- Set base (1) on a flat surface.

- Using tongue and groove attach Right Side Panel (3) and Right Front Panel (5) with 3 screws through holes in mounting blocks.

- Repeat with Left Side Panel (2) and Left Front Panel (4).

- Place assembled Right Panels on outside of mounting blocks of base. Attach with 3 screws through mounting blocks.

- Repeat process using Left Side Panels.

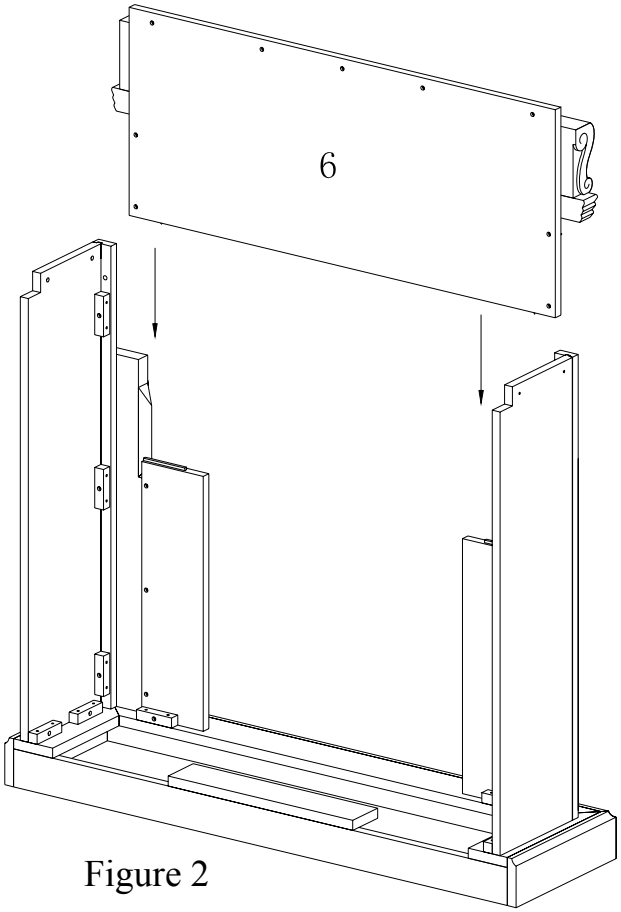


Figure 2

## Step Two
**Figure 2**

- Slide the Center Panel (6) between Right and Left Side Panels.

- Attach the Center Panel to Front Panels with 2 screws on either side of Center Panel.

- Attach Center Panel with 1 screw through the hole in the top of Right Front panel and Left Front panel.

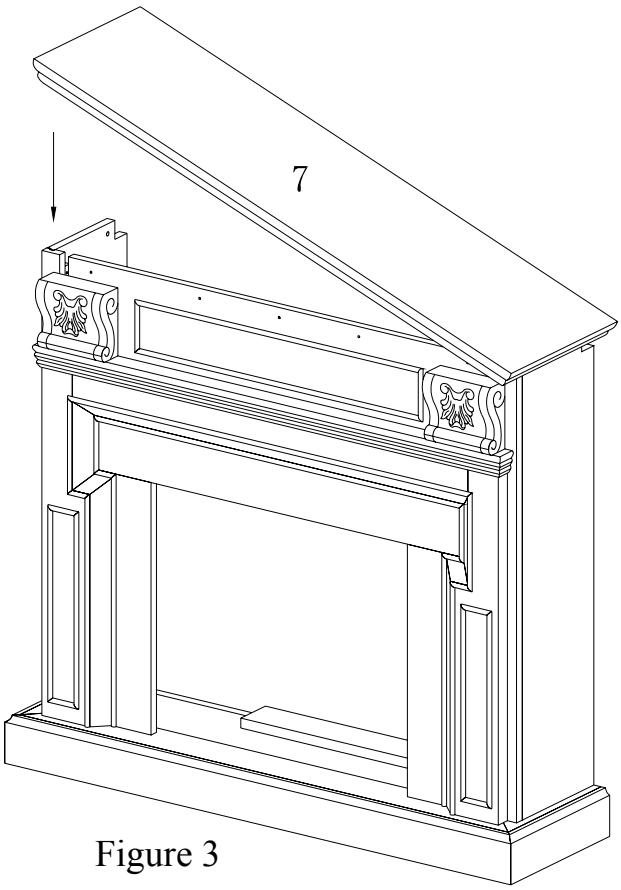


Figure 3

## Step Three
**Figure 3**

- Set Mantel Top (7) on top of unit so trim hangs over the front and sides.

- First attach through the holes in the center panel and then through the holes in each side panel.

You are now ready for the firebox installation. Please refer to the instructions that are included with your firebox.